Art. **96076**

Modelli / *Model:*

Renault T, 06/13>03/16
Renault T, 04/16>

Made in Europe

LAMPA S.p.A.

Via G. Rossa 53/55, 46019 Viadana (MN) ITALY
Tel. +39 0375 820700
UNI EN ISO 9001:2015 Certified Company

www.lampa.it

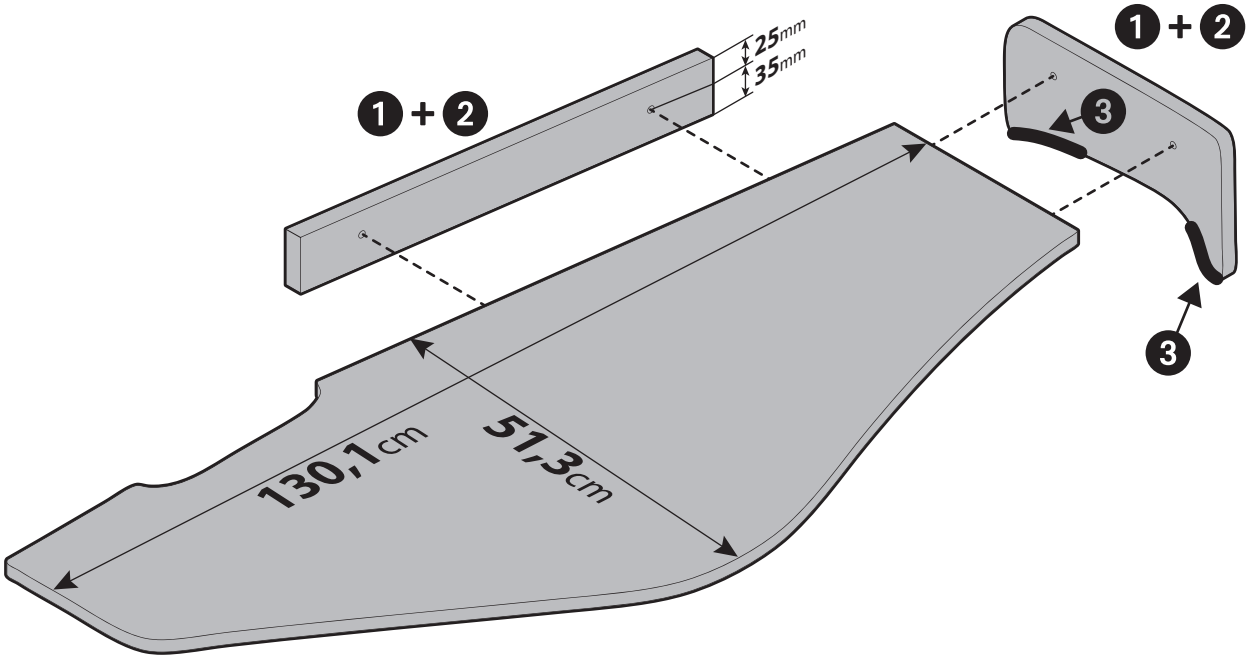

Contenuto / *Mounting kit contains:*
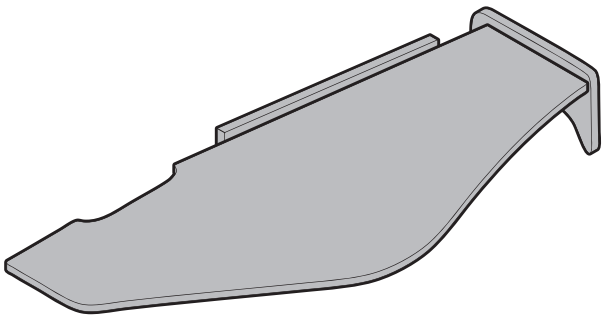
1		x**4**	⌀ **8**mm - Viti / *Screws*
2		x**4**	Coperchi per viti / *Screw covers*
3		x**4**	Velcro / *Velcro strips*
		x**1**	Brugola / *Allen key*